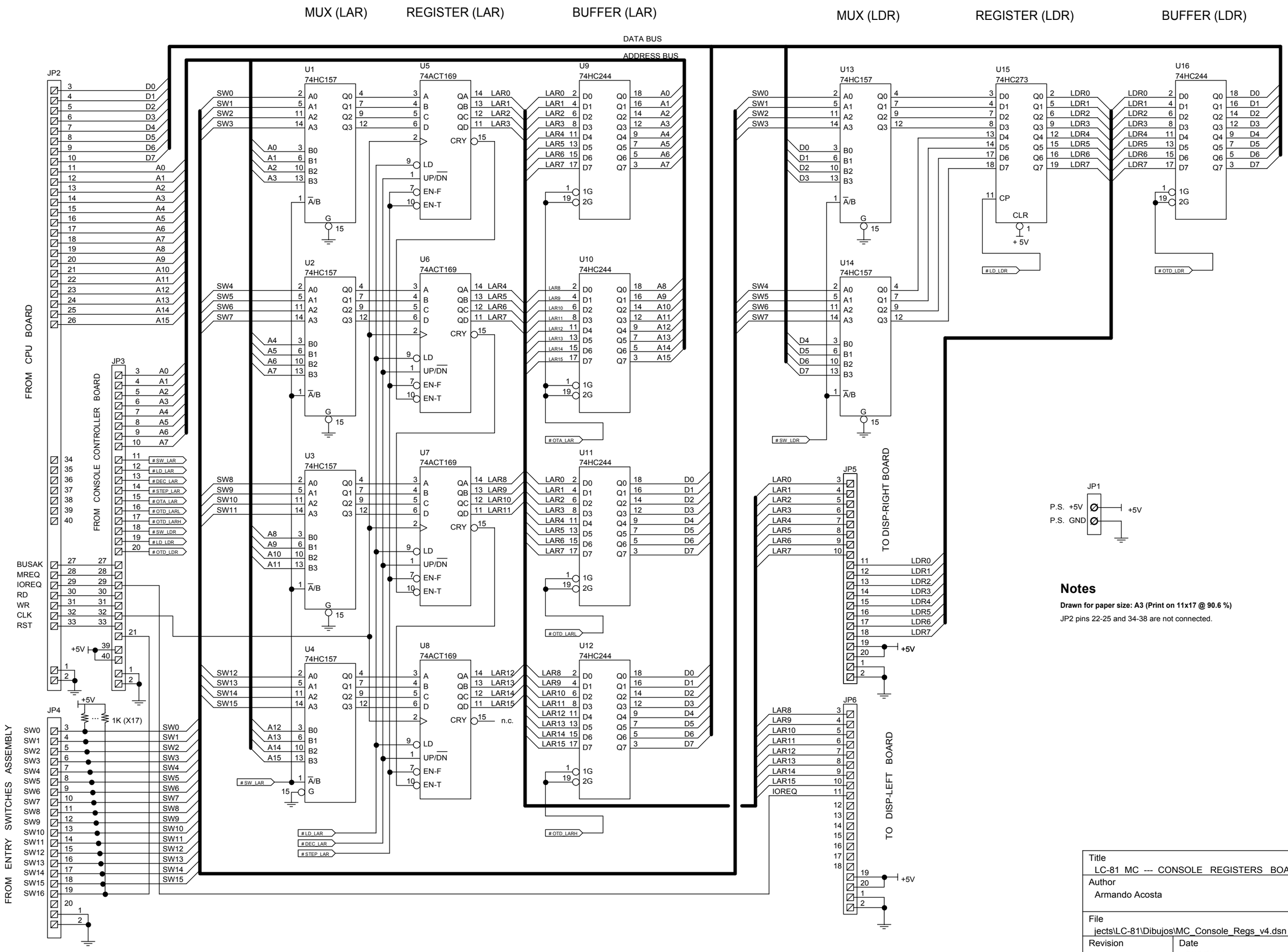

Notes

Drawn for paper size: A3 (Print on 11x17 @ 90.6 %)

JP2 pins 22-25 and 34-38 are not connected.

Title LC-81 MC --- CONSOLE REGISTERS BOARD		
Author Armando Acosta		
File jects\LC-81\Dibujos\MC_Console_Regs_v4.dsn		Document
Revision 4	Date 6/13/2011	Sheets